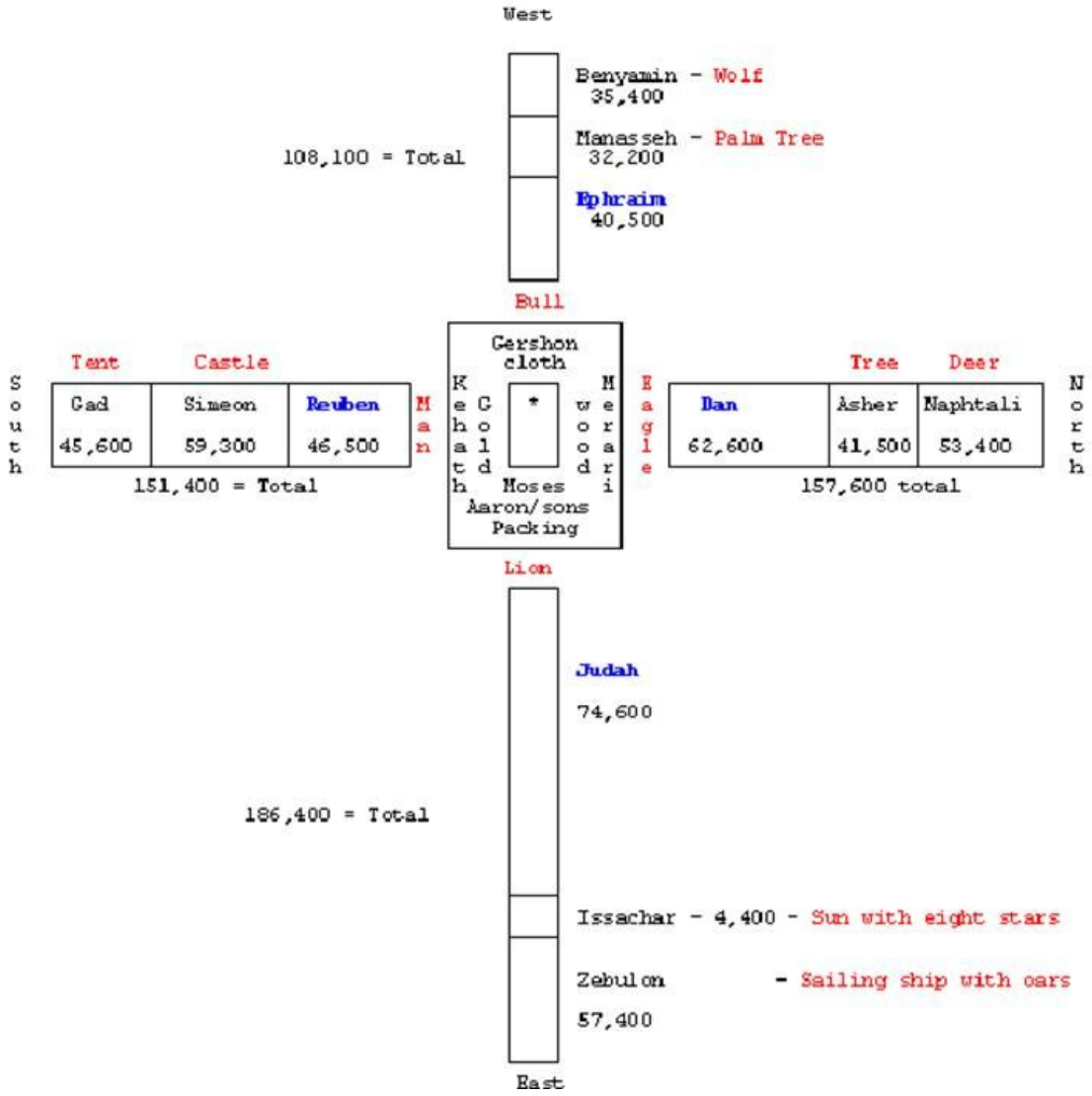
West
Benyamin - Wolf
35,400
Manasseh - Palm Tree
32,200
108,100 = Total
Ephraim
40,500
Bull
Gershon
cloth
Tent
Castle
South
Gad
45,600
Simeon
59,300
Reuben
46,500
Man
151,400 = Total
Kehath
Gold
*
Moses
Aaron/sons
Packing
Merari
Woods
Eagle
Tree
Deer
Dan
62,600
Asher
41,500
Naphtali
53,400
157,600 total
North
Lion
Judah
74,600
186,400 = Total
Issachar - 4,400 - Sun with eight stars
Zebulon - Sailing ship with oars
57,400
East